NOTES:
1. MATERIAL: 6061-T6 ALUMINUM.
2. MFG TO PROVIDE MATTING JAM NUT WITH SAME MATERIAL & FINISH AS PART NUMBER CALLOUT.
3. ISODYNE TO PROVIDE SPRING BAND.
4. BANDING SURFACE & RIDGES SHALL BE KNURL STYLE MFG OPTION.
5. DRAWING IS SUPPORTED BY ELECTRONIC SOLID MODEL; DRAWING MAY NOT BE FULLY DIMENSIONED.

REVISION HISTORY			
REV	DESCRIPTION	DATE	APPROVED
G	Complete Assembly	12/11/13	

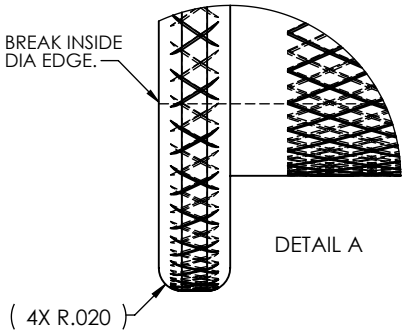

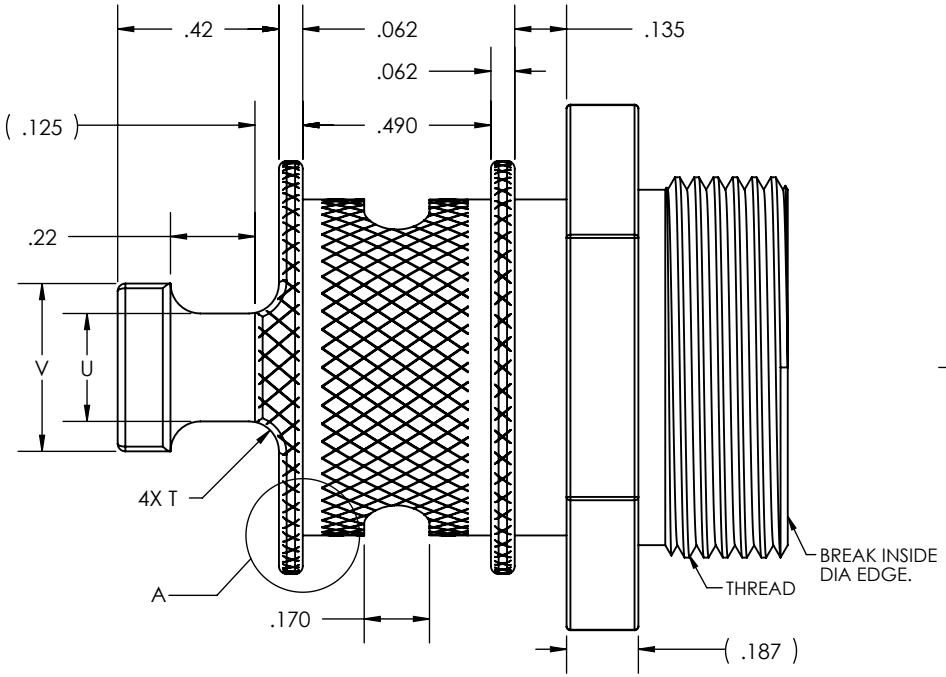

STRAIGH SHOWN WITH QUICK-TIE OPTION

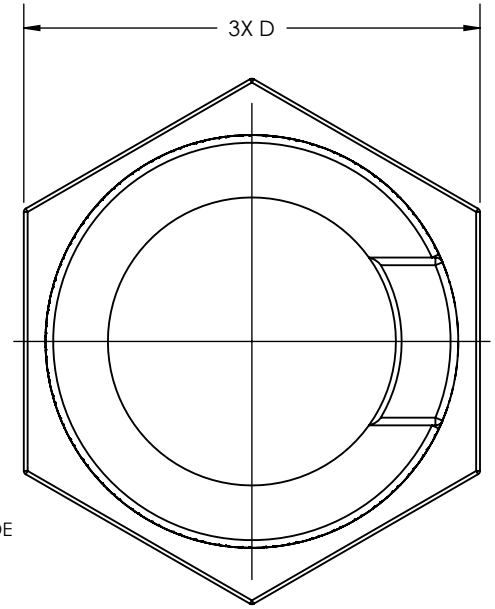

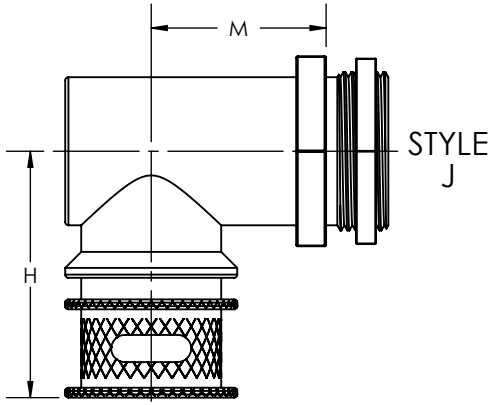

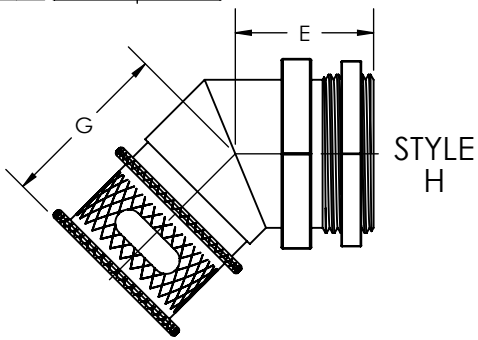

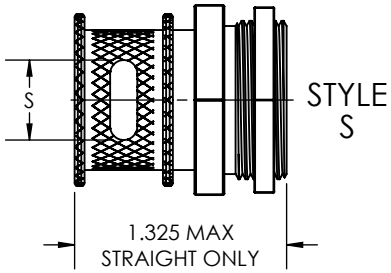

ISO (H) 750 08 NF -S -K -E

- ISODYNE IDENT
- ANGULAR TYPE - H=45°, J=90° (OMIT FOR STRAIGHT)
- SERIES INDENTIFICATION
- CABLE ENTRY TABLE I
- FINISH TABLE II
- SLOT (OMIT FOR NONE)
- QUICK-TIE (OMIT FOR NONE)
- ENVIRONMENTAL O-RING (OMIT FOR NONE)

	NAME	DATE
DRAFTER	acarter	02/06/09

TOLERANCE: {UNLESS OTHERWISE NOTED}
2 PLACE DEC ± .030
3 PLACE DEC ± .015
ANGULAR = ± 2°

UNLESS OTHERWISE SPECIFIED DIMENSIONS ARE IN INCHES

ISODYNE
7706 E. OSIE - WICHITA, KS. 67207
www.isodyneinc.com

ISODYNE PART SERIES: 750

U.S. PATENT # 5,769,665
CAGE CODE # 031M6

TABLE I - PART DIMENSIONS

CABLE ENTRY DES.	J	K	L	M (±.094)	S (NO. of SLOTS)	V	U	T RADIUS	D 3X	THREAD UNEF	(E)	(G)	(H)
01	0.125	0.250	0.450	0.593	(1) 0.170ø	0.250	0.125	0.062	0.688	1/2-28	0.380	0.890	1.280
31	0.188	0.312	0.512	0.625	(1) 0.170ø	0.250	0.125	0.062	0.688	1/2-28	0.380	0.890	1.280
02	0.250	0.375	0.575	0.656	(1) 0.170ø	0.250	0.125	0.062	0.688	1/2-28	0.380	0.890	1.280
32	0.312	0.438	0.638	0.687	(1) 0.170ø	0.281	0.125	0.062	0.813	5/8-24	0.420	0.920	1.360
03	0.375	0.500	0.700	0.719	(2) 0.250	0.310	0.155	0.078	0.813	5/8-24	0.420	0.920	1.360
33	0.438	0.562	0.762	0.750	(2) 0.250	0.310	0.155	0.078	0.938	3/4-20	0.440	0.940	1.420
04	0.500	0.625	0.825	0.781	(2) 0.250	0.375	0.219	0.078	0.938	3/4-20	0.440	0.940	1.420
34	0.562	0.688	0.888	0.812	(2) 0.250	0.375	0.219	0.078	1.063	7/8-20	0.460	0.970	1.480
05	0.625	0.750	0.950	0.844	(2) 0.500	0.375	0.219	0.078	1.063	7/8-20	0.460	0.970	1.480
35	0.688	0.812	1.012	0.875	(2) 0.500	0.375	0.219	0.078	1.188	1-20	0.480	0.990	1.540
06	0.750	0.875	1.075	0.906	(2) 0.500	0.437	0.281	0.078	1.188	1-20	0.480	0.990	1.540
36	0.812	0.938	1.138	0.937	(2) 0.500	0.437	0.281	0.078	1.313	1 1/8-18	0.500	1.000	1.560
07	0.875	1.000	1.200	0.969	(4) 0.500	0.437	0.281	0.078	1.438	1 1/4-18	0.500	1.000	1.560
37	0.938	1.062	1.262	1.000	(4) 0.500	0.437	0.281	0.078	1.438	1 1/4-18	0.520	1.020	1.630
08	1.000	1.125	1.325	1.031	(4) 0.500	0.531	0.375	0.078	1.563	1 3/8-18	0.520	1.020	1.630
38	1.062	1.188	1.388	1.062	(4) 0.500	0.531	0.375	0.078	1.563	1 3/8-18	0.550	1.060	1.690
09	1.125	1.250	1.450	1.094	(4) 0.750	0.531	0.375	0.078	1.688	1 1/2-18	0.550	1.060	1.690
10	1.250	1.375	1.578	1.156	(4) 0.750	0.531	0.375	0.078	1.813	1 5/8-18	0.790	1.260	1.850
11	1.375	1.500	1.700	1.219	(4) 0.750	0.625	0.469	0.078	1.938	1 3/4-18	CONSULT FACTORY		
12	1.500	1.625	1.825	1.281	(4) 1.000	0.625	0.469	0.078	2.188	2-18			
13	1.625	1.760	1.950	1.344	(4) 1.000	0.625	0.469	0.078	2.188	2-18			
14	1.750	1.875	2.075	1.406	(4) 1.000	0.750	0.594	0.078	2.438	2 1/4-16			
15	1.875	2.000	2.200	1.469	(4) 1.000	0.750	0.594	0.078	2.438	2 1/1-16			
16	2.000	2.125	2.325	1.531	(4) 1.000	0.750	0.594	0.078	2.563	2 3/8-16			

TABLE II MATERIAL FINISH

B	CADMIUM PLATE/OLIVE DRAB
C*	ANODIZE/BLACK
G*	HARD COAT
J	GOLD IRIDITE OVER CADMIUM PLATE OVER NICKEL
LF	CADMIUM PLATE/BRIGHT OVER ELECTROLESS NICKEL
M	ELECTROLESS NICKEL
N	CADMIUM PLATE/OLIVE DRAB OVER NICKEL
NF	CAD/OD OVER ELECTROLESS NICKEL (500 HR. SALT SPRAY)
NTK	NICKEL/TEFLON - 1000 HR. SALT FOG, 336 SO2
T	CADMIUM PLATE/BRIGHT DMP OVER NICKEL
U**	CADMIUM PLATE/BLACK
Z1**	PASSIVATE SS

* NON-CONDUCTIVE FINISH - NOT SUITABLE FOR EMI/RFI SHIELDING APPLICATIONS.

** APPLICABLE TO CORROSION RESISTING STEEL BACKSHELLS AND ACCESSORIES.

ISO VIEW
REF ONLY

ISO VIEW
REF ONLY

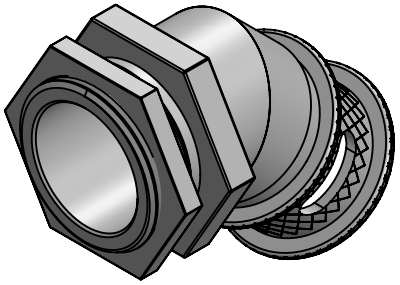

ISO VIEW
REF ONLY

ISO VIEW
REF ONLY